Sources and Storm-Effectiveness of the Wide CMEs Between April 14 and 24, 2002: Do all Frontside Halo and Partial Halo CMEs Encounter the Earth?

X. P. Zhao and Y. Liu
W. W. Hansen Experimental Physics Laboratory, Stanford University

Abstract

Based on a rough but more quantitative estimate we conclude that unless a CME is so weak that it disappears before arriving at 1 AU, both the frontside halo CME or the frontside partial halo CME with latitudinal span greater than 180° is able to encounter the Earth; the frontside partial halo CMEs with latitudinal span less than 180° is unable to encounter the Earth if its half angular width is less than the deviated angle of its central axis from the line-of-sight. Among the three halo and two partial halo CMEs between April 14 and 24, 2002, two halo and one partial halo CMEs were associated with EIT and X-ray flares with longer duration, and almost certain to arise in the frontside of the Sun. Two ICMEs are identified to be the counterpart of the two frontside halo CMEs. No ICME corresponds to the partial halo CME. It is determined that for the frontside partial halo CME, the half angular width is 40° and the deviated angle of its central axis from the line-of-sight is 45°. All three frontside events in the period of time confirm above conclusion. It may be used to predict whether or not a frontside wide halo CME is able to encounter the Earth.

The 2003 AGU Fall Meeting, December 8 – (10) – 12, 2003, San Francisco

1. Introduction

CMEs with narrow latitudinal span in the plan of the sky are believed to be not Earth-directed (i.e., there is no any part of those CMEs are headed for the Earth) and are not storm-effective. CMEs with latitudinal span greater than a specified value (say, 140° [Webb et al., 2000]), i.e. partial halo CMEs with latitudinal span less than 360° or halo CMEs with latitudinal span of 360°, are often implicitly assumed to be Earth-directed if they arise from the frontside of the Sun. Earth-directed CMEs become a synonym of frontside halo or frontside partial halo CMEs. We use the term "wide CME" to name both halo and partial halo CMEs in what follows.

Is the implicit assumtion reasonable, i.e., do all frontside wide CMEs encounter the Earth?

Between 14 and 24 April 2002 there are halo and partial halo CMEs that may be unambiguously determined to arise in the frontside of the Sun. These frontside wide CMEs provide a unique chance to unambiguously answer the question.

In this poster, we will determine:

a. Which of the wide CMEs between April 14 and 24, 2002 arise from the frontside of the Sun?

b. Which of the frontside wide CMEs are able to encounter the Earth?

c. What determines a frontside wide CME being able to encounter the Earth?

2. The Frontside wide CMEs between 14 and 24 April 2002

Between 14 and 24 April 2002 the CME Catalog of the CDAW Data Center (http://cdaw.gsfc.nasa.gov/CME_list/) lists, among 37 CMEs, two halo CMEs and two partial halo CMEs. Figures 1, 2, 3, and 4 show the 0415_0350 Sun-centered halo CME, the 0417_0826 halo CME, the 0417_1626 partial halo CME, and the 0421_0127 partial halo CME, respectively. Red circles overploted on each C3 difference image in Figures 1, 2, 3, and 4 denote the reproduced halo or partial halo using the cone model [Zhao et al., 2002]. Sybmols 'wd' in Figures 1–4 denote the inferred angular width of the cone-like CME and ('df','dt') the orientation of its central axis, i.e., the longitude from the CMP and the latitude from Sun's equator.

Figure 1 shows a faint halo, equally visible all around C3 occultor, and starting at 0415_0518, a new inner co-central halo occurred. Is the new halo the inner structure of the outer halo CME or, seperately, a new halo CME?

Figure 4 shows a partial halo over west limb. Starting at 0421_0318 an elliptic halo occurred in the NW quadrant. This elliptic halo appears to be another halo CME seperately from the partial halo CME in the western quadrant.

To determine whether these wide CMEs arise in the frontside or backside of the Sun, we search for CME-associated near surface activity occurred within 0.5 hours prior to or after the CME onset. Table 1 lists the near surface activity possibly associated with the wide CMEs in Figures 1 – 4. It shows that the three wide CMEs associated with longer-duration EIT and X-ray flares are almost certain to be frontside ones.

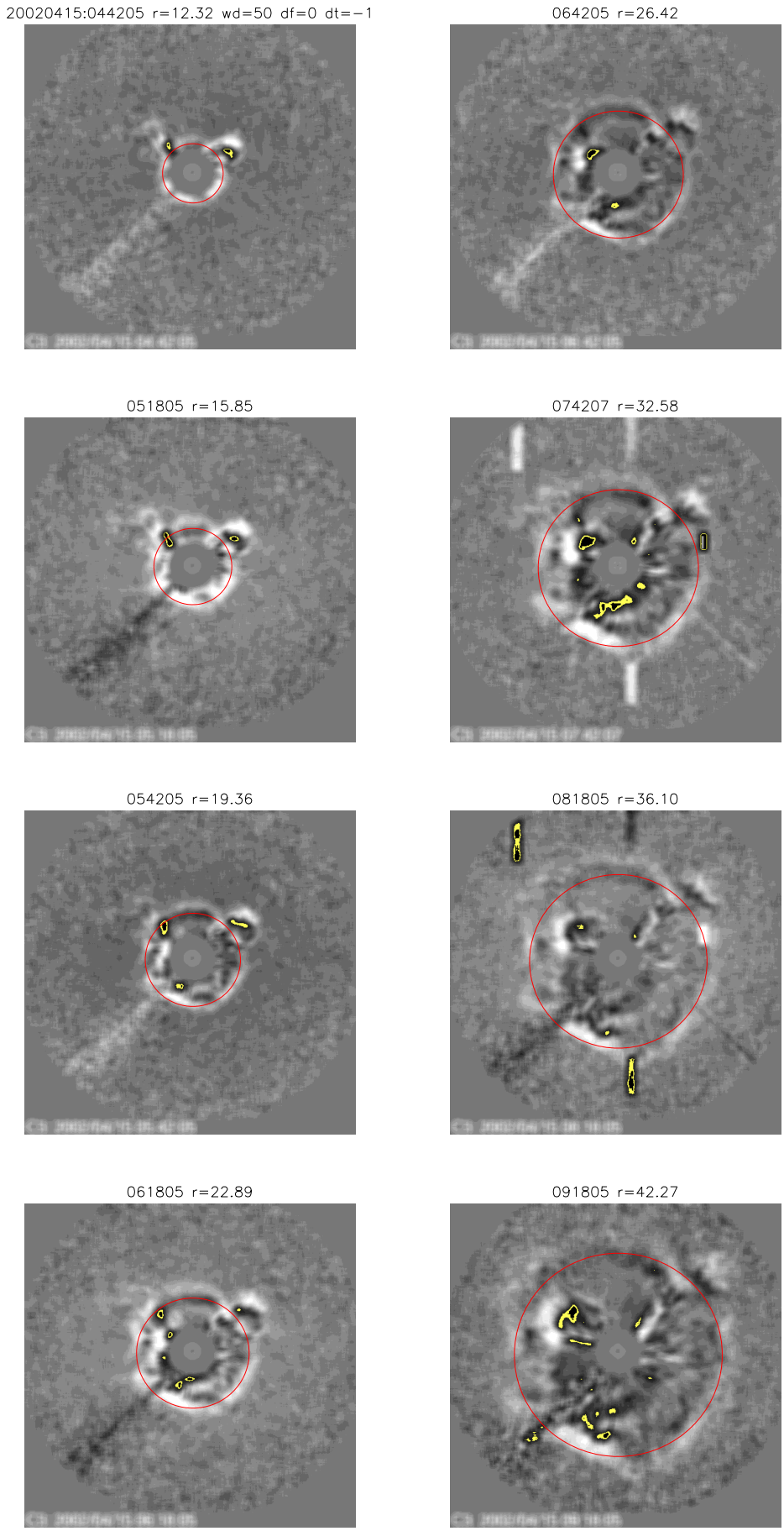

Fig. 1.— The C3 difference images and the reproduced halos (red) for the 20020415_0350 Sun-centered halo CME.

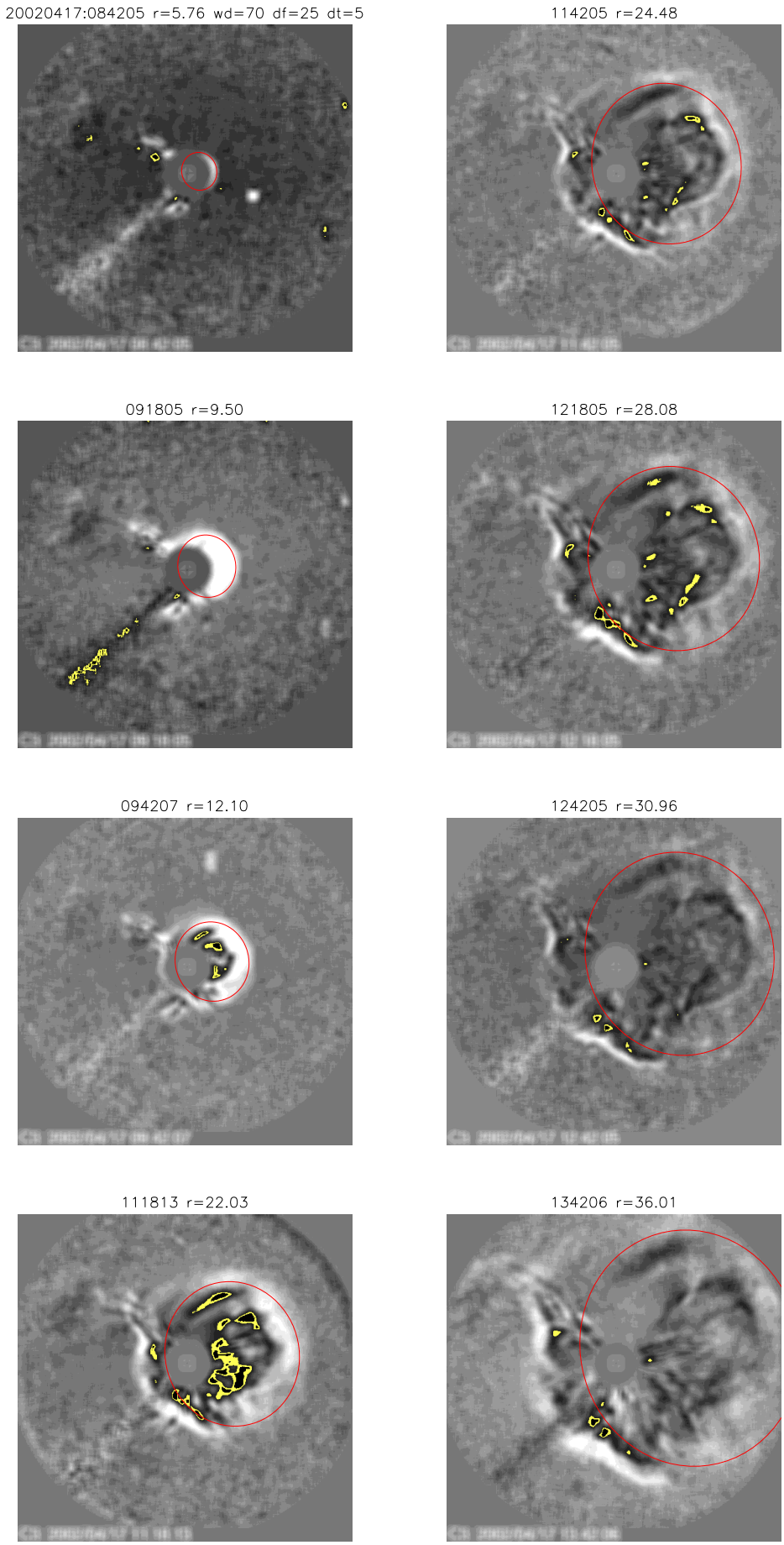

Fig. 2.— The C3 difference images and the reproduced halos (red) for the 20020417_0826 halo CME.

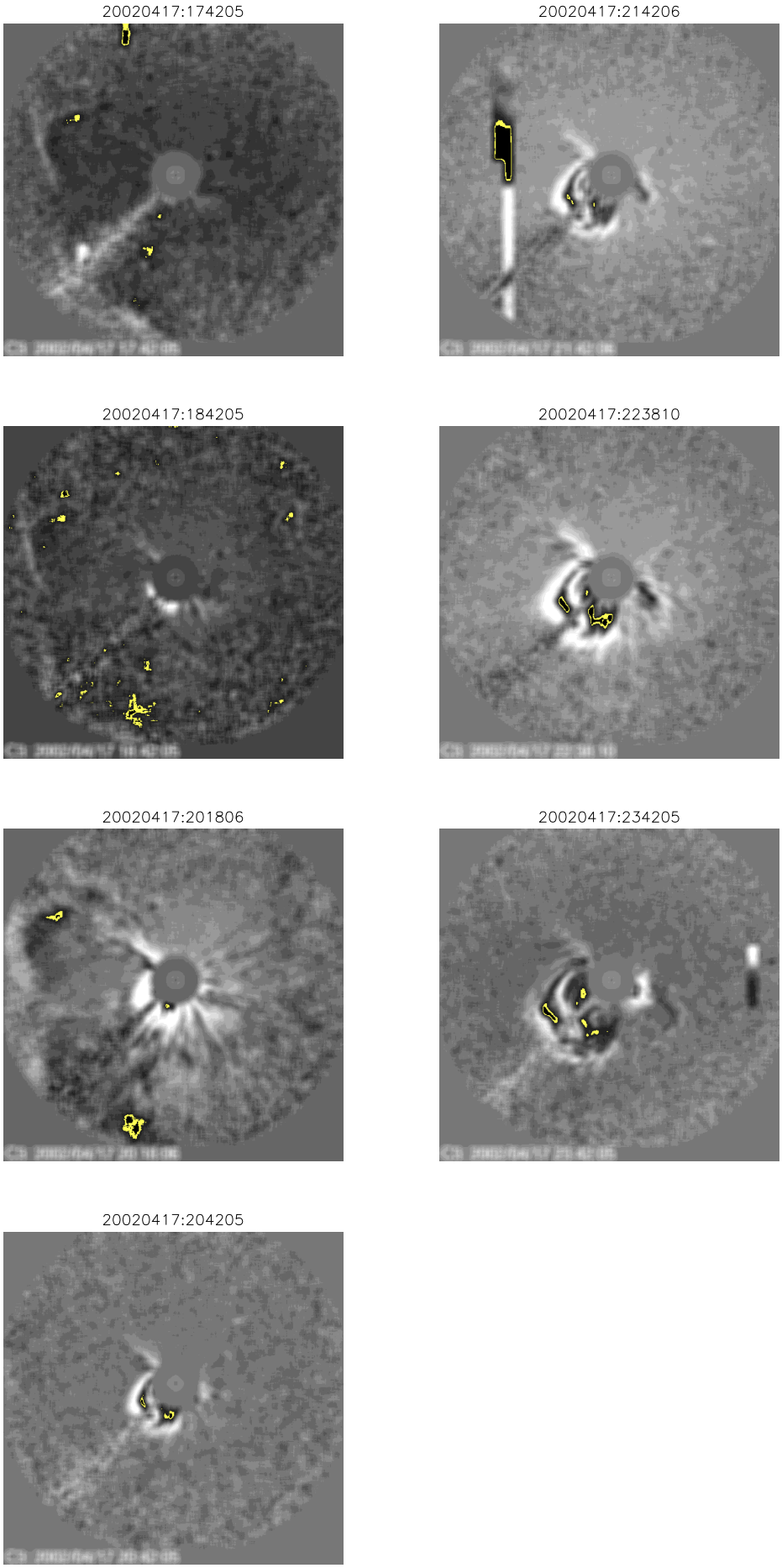

Fig. 3.— The C3 difference images for the 20020417_1626 partial halo CME.

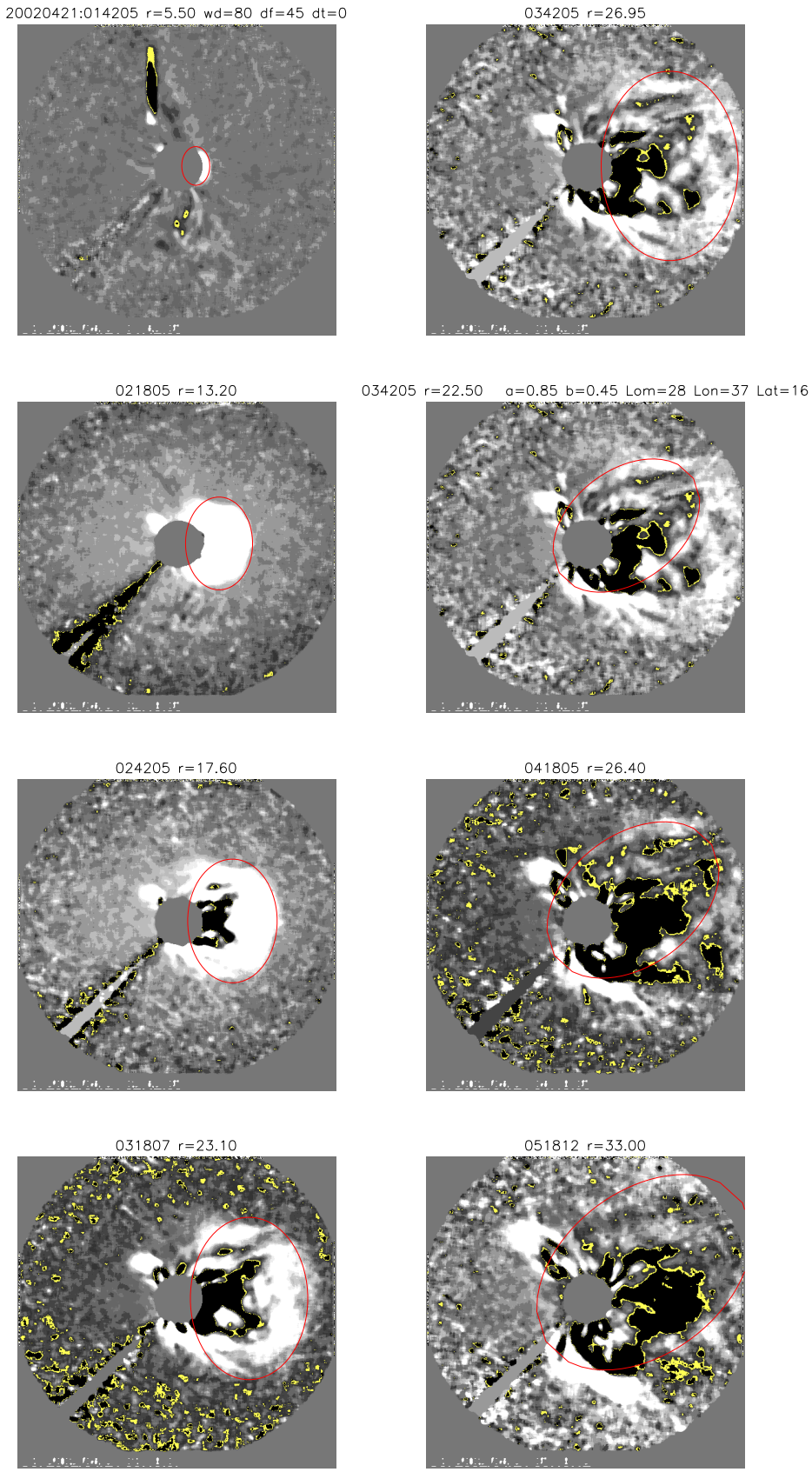

Fig. 4.— The C3 difference images and the reproduced halos (red) for the 20020415_0127 partial halo CME and 20020421_0318 elliptic halo CME.

3. Earth-directed wide CMEs

For an Earth-directed CME there must be some part of it heading for the Earth. Unless it is so weak that it fully disappears before arriviving at 1 AU, there must be its interplanetary counterpart (ICME [Zhao, 1992]) near the Earth.

We use low proton temperature events [Richardson and Cane, 1995], counterstreaming electron events [Gosling, 1990], and magnetic clouds [Burlaga, 1981] as the signature of ICMEs. In addition, we identify the ambient fast and slow wind by comparing the predicted tangetial component (By) with observed one and by examining Bz component and the plasma beta to distingush ICMEs from the corotaing interaction regions (CIRs).

Figure 5 shows the OMNI hourly-averaged solar wind plasma velocity, IMF magnetude, IMF Bz, By, proton temperature, and solar wind plasma Beta between April 15 and 30, 2002. The red lines overploted on the fourth and fifth panels are predicted tangetial IMF component and proton temperature using observed Bx component and solar wind speed. [Richardson and Cane, 1995]. Figure 5 shows that the two ICMEs are the interplanetary counterpart of the 0415_0350 and 0417_0826 frontside halo CMEs, and no ICME corresponds to the 0421_0127 frontside partial halo CME.

Table 1: Near Surface Activity of Wide CMEs

First C2 Appearance Date Time (UT) yyyymmdd_hhmm	EIT195 Start-Peak-End hhmm-hhmm-hhmm	X-ray event Start-End Class hhmm-hhmm	H-alpha flare Start-End Class hhmm-hhmm	Source Region
20020415_0350	0312-0500-0713	0305-0355 M1.2	0307-0325 SF	9906 S15W01
20020417_0826	0800-0848-1112	0746-0824 M2.6	0750-0815 2N	9906 S14W34
20020417_1626				
20020421_0127	0130-0224-0640	0043-0151 X1.5	0059-0131 1F	9906 S14W84
20020421_0318(?)			0326-0332 SF	9912 N10W01

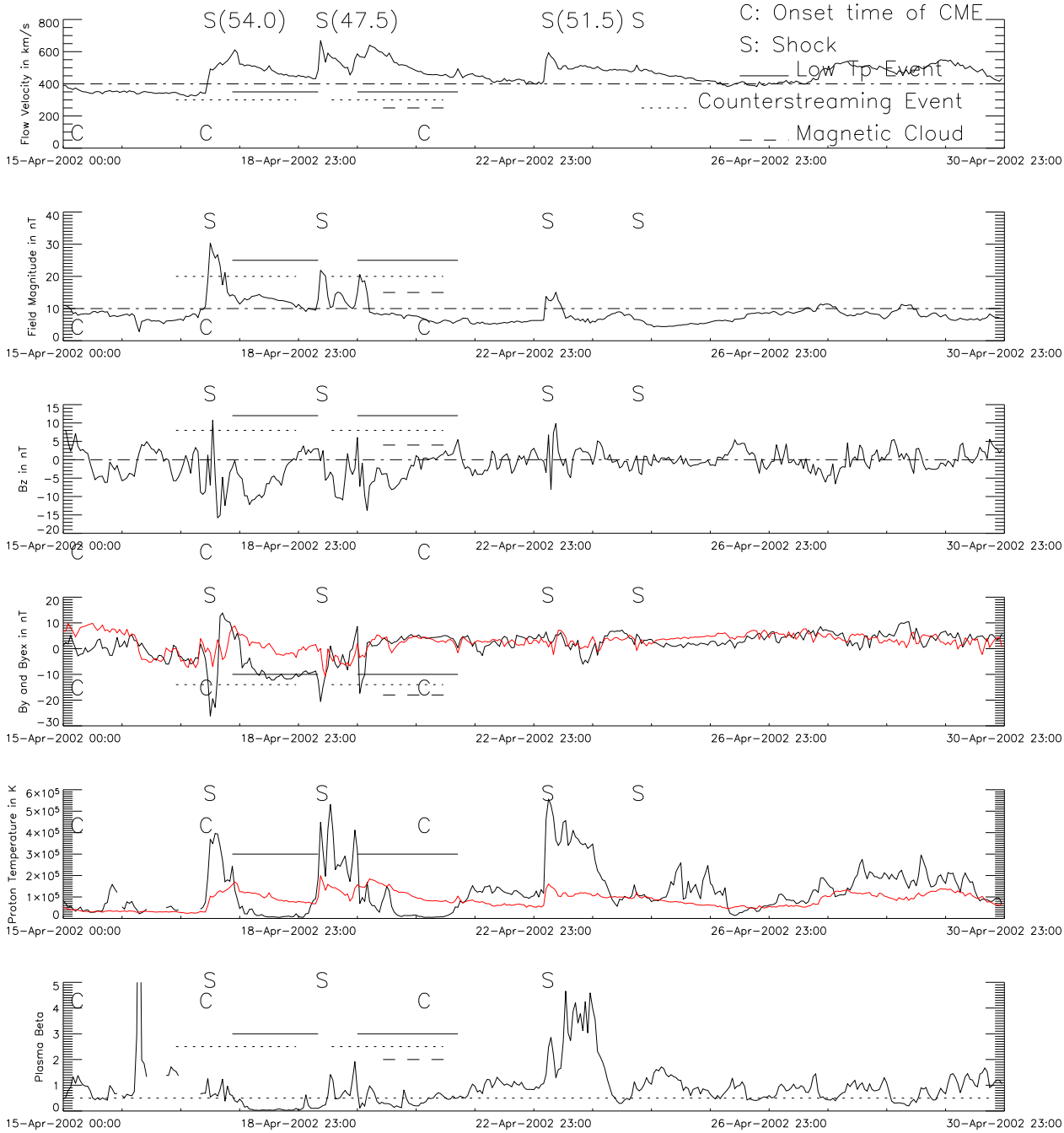

Fig. 5.— The ICMEs and ICR between April 14 and 30, 2002 (see top panel for the explanation of symboles).

4. Visibility of wide CMEs

The visibility of wide CMEs depends on many factors, such as the shape of the three dimentional structure (e.g., shell or bubble), the CME propagation direction, the inner electron density distribution, and the dependence of Thompson-scattering intensity in the line-of-sight on these factors. To make a rough but more quantitative estimate, we use a cone model for describing the geometric property of wide CMEs. We use symbols aa and bb to denote, respectively, the half angular width of a cone-like CME and the angle between the central axis of the cone-like CME and the line-of-sight (LOS). When $aa > bb$, there generally are two red lines, "L1" and "L2" (see Figure 6 where $aa = 25$ and $bb = 10$) that denote the two edges after acroosing the deshed-dotted lines labled "C2 edge 1" and "C2 edge 2" (see Figure 6). The electrons located along the red lines are the major contributor to Thompson-scattering. A halo is formed if the electron density at L1 and L2 is so dense that the resulted Thompson-scattering intensity can be detected by C2 and C3 coronagraph. When bb less than a few degrees the halo becomes Sun-centered. A partial halo is formed if the electron density at L2 is so rare due to its higher altitude that it can not make a visible Thompson-scattering intensity for C2 and C3. The latitudinal span of such formed partial halo CMEs may be greater or less than 180° depending on the distribution of electron density within the CMEs.

Figure 7 shows the geometry for a cone-like wide CME with $aa = 55$ and $bb = 40$. A halo or partial halo may be formed as in the case of Figure 6, but in the case only the part near the edge of the cone-like CME may hit the Earth.

Even when $bb = 80°$, i.e. the CME-associated-near-surface activity is located near the limb, halo CME may still be formed if the angular width of the CME is very wide. Figure 8 shows the case. Only the part of the CME very close the edge may hit the Earth in the case.

As bb increases and aproaches to aa, the part of CME that encounters the Earth moves from central part to the edge part and the probability to form halo decreases. Figure 9 indicates that only partial halo can be formed even though $aa > bb$.

It is expected that only partial halo can be formed when $aa \leq bb$, and the latitudinal span of such formed partial halo must be less than 180°.

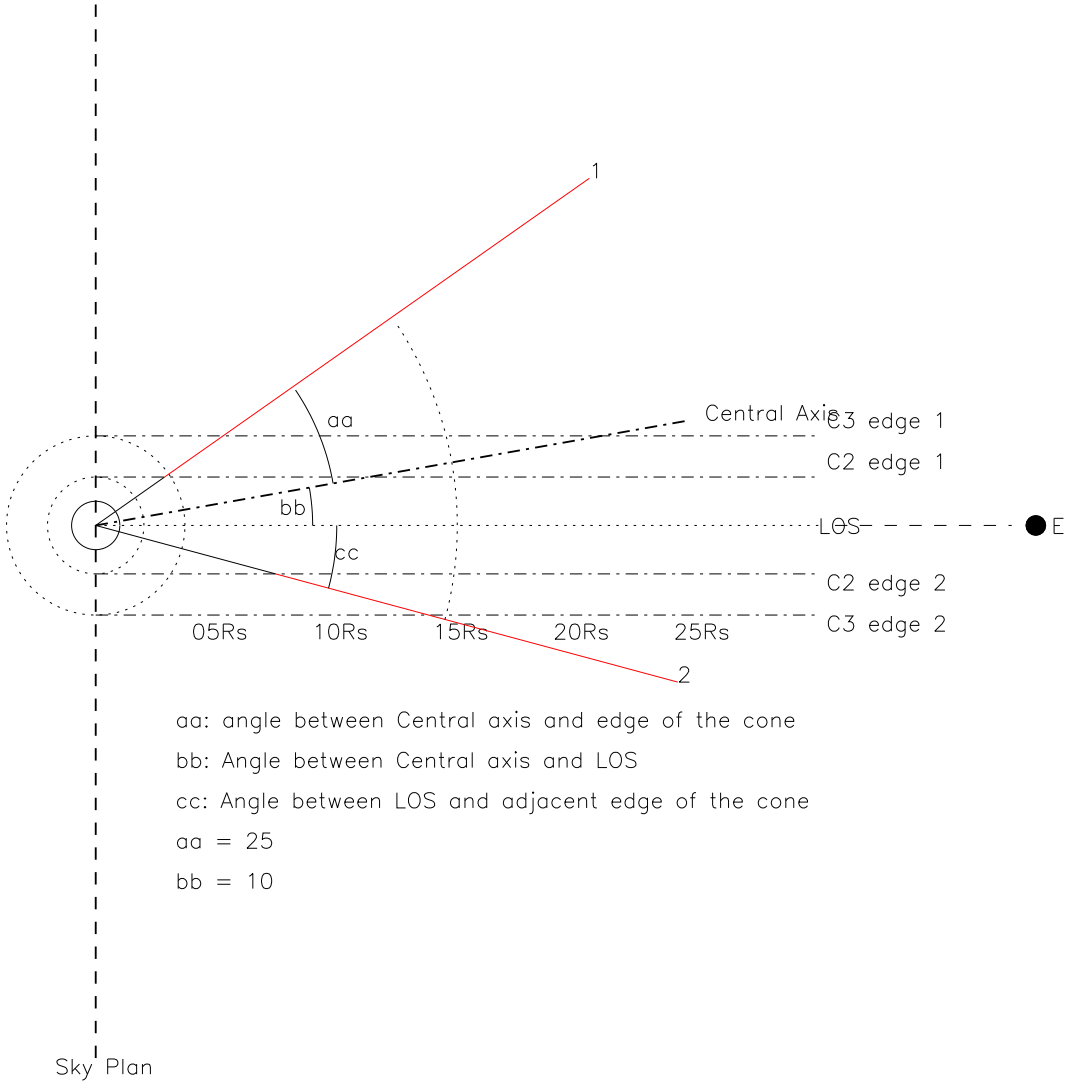

Fig. 6.— The geometry for a cone-like CME with $aa = 25$ and $bb = 10$ to form a visible halo or partial halo.

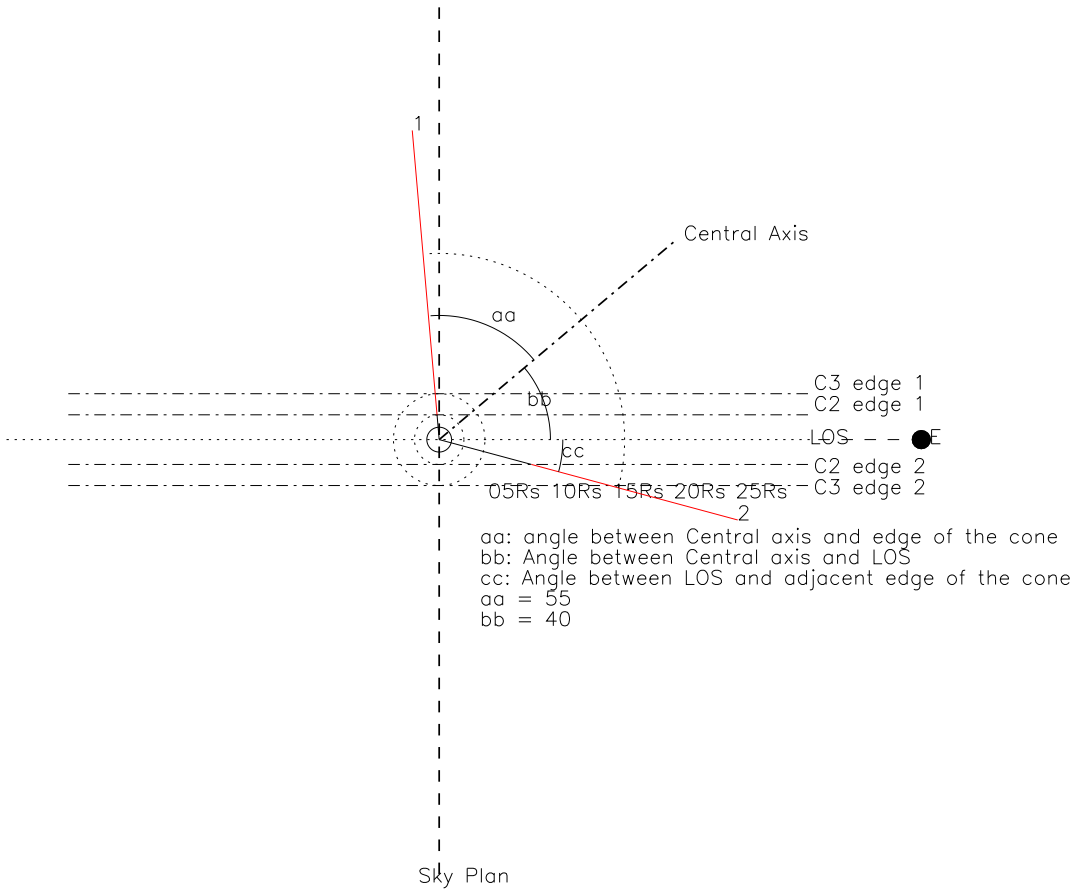

Fig. 7.— The geometry for a cone-like CME with $aa = 55$ and $bb = 40$ to form a visible halo or partial halo.

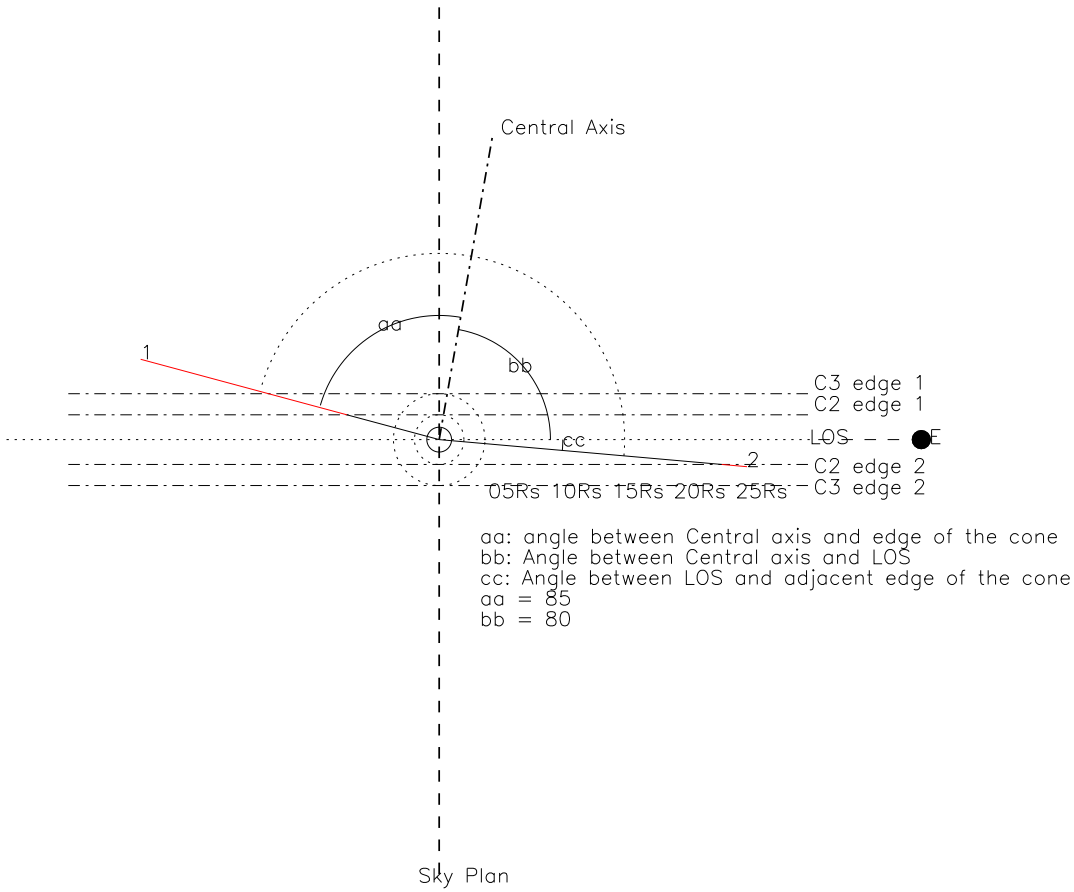

Fig. 8.— The geometry for a cone-like CME with $aa = 85$ and $bb = 80$ to form a visible halo or partial halo.

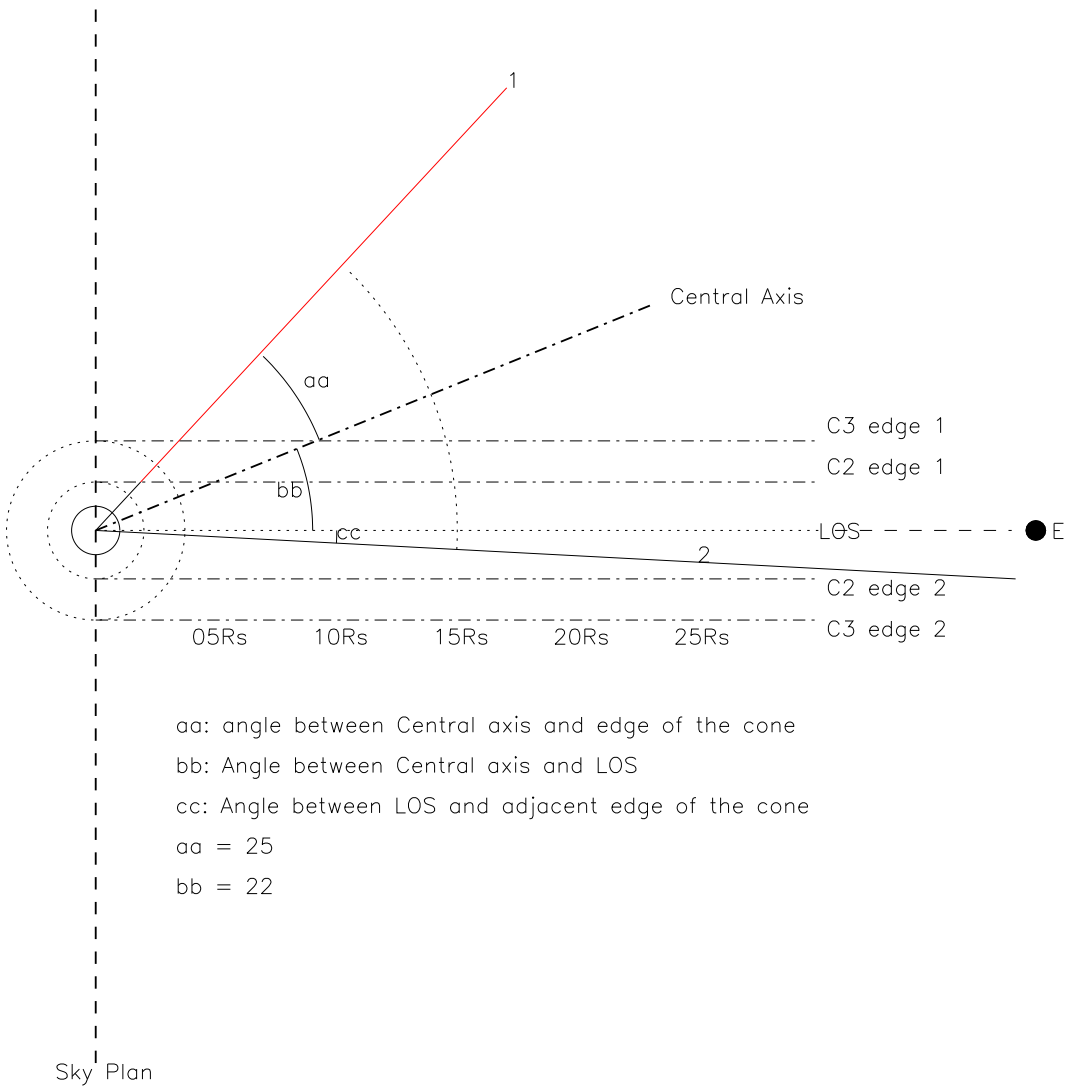

Fig. 9.— The geometry for a cone-like CME with $aa = 25$ and $bb = 22$ to form a visible halo or partial halo.

5. Summary and Discussion

• Based on the above estimate, we conclude that in the case of $aa > bb$ both frontside halo CME or frontside partial halo CME is formed no matter where the source of CME occurred. All such formed frontside wide CMEs should be able to encounter the Earth even for the partial halo CMEs having latitudinal span less than 180°. In the case of $aa < bb$, only partial halo CMEs can be formed, and their latitudinal span must be less than 180°. Such frontside partial halo CMEs can not encounter the Earth.

• The 0415_0350 and 0417_0826 frontside halo CMEs do encounter the Earth and generate two ICMEs near the Earth, as expected.

• No ICME corresponds to the 0421_0127 frontside partial halo CME showing it is unable to encounter the Earth, though it was associated with a longer-duration X1.5 X-ray flare. The latitudinal span of the partial halo is 165°, and the half angular width and the orientation of the central axial for the partial halo is $aa = 40°$ and $bb = 45°$. Thus it is understandable why it did not encounter the Earth.

• It has been found that only about half of frontside wide CMEs have corresponding ICMEs, and those ICME-associated wide CMEs have their near surface activity located within $\sim 40°$ of central meridian except for one event within 50 degrees [Cane et al., 2000]. The finding suggests that not all CMEs may form wide CMEs and the real angular width of CMEs appears to be less than 100°. CMEs with greater angular width and higher electron density have higher probability to form wide CMEs. The probability may be zero if the angular width of a CME is rather small and/or the electron density is very rare. This may be used to understand why there are only 5 wide CMEs among 37 CMEs between April 14 and 24, 2002, and why some trasient geomagnetic storms can not associated with any frontside wide CMEs identified by C2 and C3 coronagraph.

• The cone model is valid when the angular width of a CME is not changed while propagating through the corona. Observations show that it is true for most narrow CMEs near limbs. Even for the case of changing angular width, the inferrence that the frontside wide CMEs with latitudinal span greater than 180° may encounter the Earth may still be valid.